The SN5405 is obsolete and no longer is supplied.

- **Package Options Include Plastic Small-Outline (D, NS), Shrink Small-Outline (DB), and Ceramic Flat (W) Packages, Ceramic Chip Carriers (FK), and Standard Plastic (N) and Ceramic (J) DIPs**
- **Dependable Texas Instrument Quality and Reliability**

SN5405, SN54LS05, SN54S05 . . . J PACKAGE
SN7405 . . . N PACKAGE
SN74LS05 . . . D, DB, N, OR NS PACKAGE
SN74S05 . . . D, N, OR NS PACKAGE
(TOP VIEW)

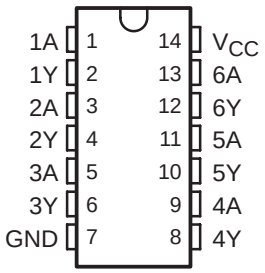

SN54LS05, SN54S05 . . . W PACKAGE
(TOP VIEW)

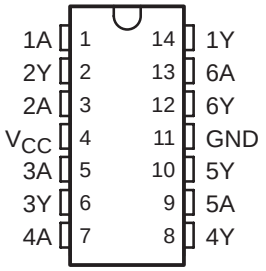

SN54LS05, SN54S05 . . . FK PACKAGE
(TOP VIEW)

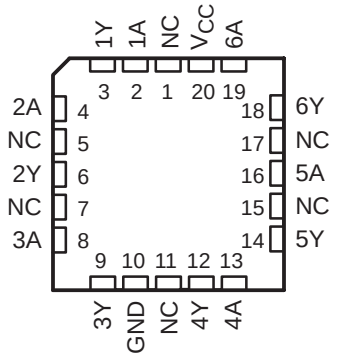

NC − No internal connection

description/ordering information

These devices contain six independent inverters. To perform correctly, the open-collector outputs require pullup resistors. These devices may be connected to other open-collector outputs to implement active-low wired-OR or active-high wire-AND functions. Open-collector devices often are used to generate high V_{OH} levels.

ORDERING INFORMATION

T_A	PACKAGE†		ORDERABLE PART NUMBER	TOP-SIDE MARKING
0°C to 70°C	PDIP − N	Tube	SN7405N	SN7405N
			SN74LS05N	SN74LS05N
			SN74S05N	SN74S05N
	SOIC − D	Tube	SN74LS05D	LS05
		Tape and reel	SN74LS05DR	
		Tube	SN74S05D	S05
		Tape and reel	SN74S05DR	
	SOP − NS	Tape and reel	SN74LS05NSR	74LS05
			SN74S05NSR	74S05
	SSOP − DB	Tape and reel	SN74LS05DBR	LS05
−55°C to 125°C	CDIP − J	Tube	SNJ54LS05J	SNJ54LS05J
			SNJ54S05J	SNJ54S05J
	CDIP − W	Tube	SNJ54LS05W	SNJ54LS05W
			SNJ54S05W	SNJ54S05W
	LCCC − FK	Tube	SNJ54LS05FK	SNJ54LS05FK
			SNJ54S05FK	SNJ54S05FK

† Package drawings, standard packing quantities, thermal data, symbolization, and PCB design guidelines are available at www.ti.com/sc/package.

Please be aware that an important notice concerning availability, standard warranty, and use in critical applications of Texas Instruments semiconductor products and disclaimers thereto appears at the end of this data sheet.

PRODUCTION DATA information is current as of publication date. Products conform to specifications per the terms of Texas Instruments standard warranty. Production processing does not necessarily include testing of all parameters.

Copyright © 2003, Texas Instruments Incorporated
On products compliant to MIL-PRF-38535, all parameters are tested unless otherwise noted. On all other products, production processing does not necessarily include testing of all parameters.

The SN5405 is obsolete and no longer is supplied.

FUNCTION TABLE
(each inverter)

INPUT A	OUTPUT Y
H	L
L	H

logic diagram (positive logic)

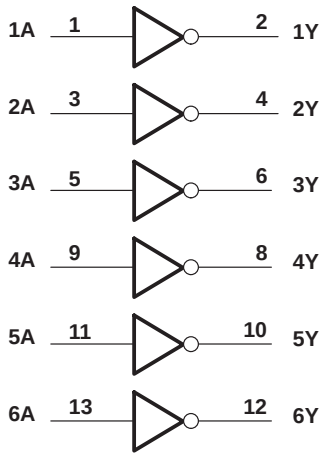

$Y = \overline{A}$

Pin numbers shown are for the D, DB, J, N, and NS packages.

schematic (each inverter)

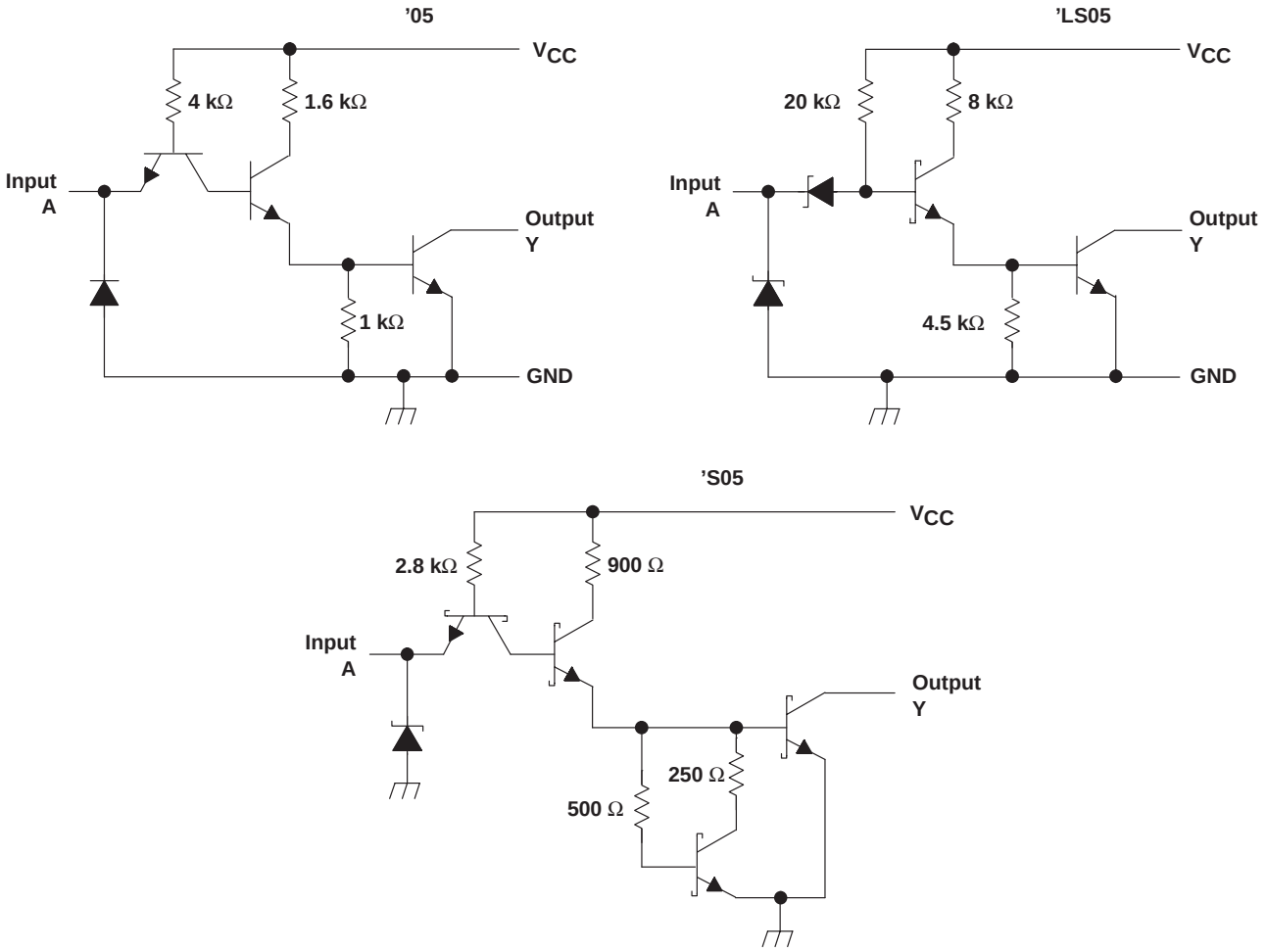

Resistor values shown are nominal.

absolute maximum ratings over operating free-air temperature (unless otherwise noted)†

Supply voltage, V_{CC} (see Note 1): '05, 'LS05, 'S05		7 V
Input voltage, V_I: '05, 'S05		5.5 V
'LS05		7 V
Off-state output voltage, V_O		7 V
Package thermal impedance, θ_{JA} (see Note 2):	D package	86°C/W
	DB package	96°C/W
	N package	80°C/W
	NS package	76°C/W
Storage temperature range, T_{stg}		−65°C to 150°C

† Stresses beyond those listed under "absolute maximum ratings" may cause permanent damage to the device. These are stress ratings only, and functional operation of the device at these or any other conditions beyond those indicated under "recommended operating conditions" is not implied. Exposure to absolute-maximum-rated conditions for extended periods may affect device reliability.

NOTES: 1. Voltage values are with respect to network ground terminal.
2. The package thermal impedance is calculated in accordance with JESD 51-7.

The SN5405 is obsolete and no longer is supplied.

recommended operating conditions

		SN5405			SN7405			UNIT
		MIN	NOM	MAX	MIN	NOM	MAX	
V_{CC}	Supply voltage	4.5	5	5.5	4.75	5	5.25	V
V_{IH}	High-level input voltage	2			2			V
V_{IL}	Low-level input voltage			0.8			0.8	V
V_{OH}	High-level output voltage			5.5			5.5	V
I_{OL}	Low-level output current			16			16	mA
T_A	Operating free-air temperature	−55		125	0		70	°C

electrical characteristics over recommended operating free-air temperature range (unless otherwise noted)

PARAMETER	TEST CONDITIONS†			SN5405			SN7405			UNIT
				MIN	TYP‡	MAX	MIN	TYP‡	MAX	
V_{IK}	V_{CC} = MIN,	I_I = −12 mA				−1.5			−1.5	V
I_{OH}	V_{CC} = MIN,	V_{OH} = 5.5 V	V_{IL} = 0.8 V						0.25	mA
			V_{IL} = 0.7 V			0.25				
V_{OL}	V_{CC} = MIN,	V_{IH} = 2 V,	I_{OL} = 16 mA		0.2	0.4		0.2	0.4	V
I_I	V_{CC} = MAX,	V_I = 5.5 V				1			1	mA
I_{IH}	V_{CC} = MAX,	V_I = 2.4 V				40			40	μA
I_{IL}	V_{CC} = MAX,	V_I = 0.4 V				−1.6			−1.6	mA
I_{CCH}	V_{CC} = MAX,	V_I = 0 V			6	12		6	12	mA
I_{CCL}	V_{CC} = MAX,	V_I = 4.5 V			18	33		18	33	mA

† For conditions shown as MIN or MAX, use the appropriate value specified under recommended operating conditions.
‡ All typical values are at V_{CC} = 5 V, T_A = 25°C.

switching characteristics, V_{CC} = 5 V, T_A = 25°C (see Figure 1)

PARAMETER	FROM (INPUT)	TO (OUTPUT)	TEST CONDITIONS		MIN	TYP	MAX	UNIT
t_{PLH}	A	Y	R_L = 4 kΩ	C_L = 15 pF		40	55	ns
t_{PHL}			R_L = 400 Ω			8	15	

recommended operating conditions

		SN54LS05			SN74LS05			UNIT
		MIN	NOM	MAX	MIN	NOM	MAX	
V_{CC}	Supply voltage	4.5	5	5.5	4.75	5	5.25	V
V_{IH}	High-level input voltage	2			2			V
V_{IL}	Low-level input voltage			0.7			0.8	V
V_{OH}	High-level output voltage			5.5			5.5	V
I_{OL}	Low-level output current			4			8	mA
T_A	Operating free-air temperature	−55		125	0		70	°C

electrical characteristics over recommended operating free-air temperature range (unless otherwise noted)

PARAMETER	TEST CONDITIONS†			SN54LS05			SN74LS05			UNIT
				MIN	TYP‡	MAX	MIN	TYP‡	MAX	
V_{IK}	V_{CC} = MIN,	I_I = −18 mA				−1.5			−1.5	V
I_{OH}	V_{CC} = MIN,	V_{IL} = MAX,	V_{OH} = 5.5 V			0.1			0.1	mA
V_{OL}	V_{CC} = MIN,	V_{IH} = 2 V	I_{OL} = 4 mA		0.25	0.4		0.25	0.4	V
			I_{OL} = 8 mA					0.35	0.5	
I_I	V_{CC} = MAX,	V_I = 7 V				0.1			0.1	mA
I_{IH}	V_{CC} = MAX,	V_I = 2.7 V				20			20	μA
I_{IL}	V_{CC} = MAX,	V_I = 0.4 V				−0.4			−0.4	mA
I_{CCH}	V_{CC} = MAX,	V_I = 0 V			1.2	2.4		1.2	2.4	mA
I_{CCL}	V_{CC} = MAX,	V_I = 4.5 V			3.6	6.6		3.6	6.6	mA

† For conditions shown as MIN or MAX, use the appropriate value specified under recommended operating conditions.
‡ All typical values are at V_{CC} = 5 V, T_A = 25°C.

switching characteristics, V_{CC} = 5 V, T_A = 25°C (see Figure 2)

PARAMETER	FROM (INPUT)	TO (OUTPUT)	TEST CONDITIONS	MIN	TYP	MAX	UNIT
t_{PLH}	A	Y	R_L = 2 kΩ, C_L = 15 pF		17	32	ns
t_{PHL}					15	28	

The SN5405 is obsolete and no longer is supplied.

recommended operating conditions

		SN54S05			SN74S05			UNIT
		MIN	NOM	MAX	MIN	NOM	MAX	
V_{CC}	Supply voltage	4.5	5	5.5	4.75	5	5.25	V
V_{IH}	High-level input voltage	2			2			V
V_{IL}	Low-level input voltage			0.8			0.8	V
V_{OH}	High-level output voltage			5.5			5.5	V
I_{OL}	Low-level output current			20			20	mA
T_A	Operating free-air temperature	−55		125	0		70	°C

electrical characteristics over recommended operating free-air temperature range (unless otherwise noted)

PARAMETER	TEST CONDITIONS†			SN54S05			SN74S05			UNIT
				MIN	TYP‡	MAX	MIN	TYP‡	MAX	
V_{IK}	V_{CC} = MIN,	I_I = −18 mA				−1.2			−1.2	V
I_{OH}	V_{CC} = MIN,	V_{OH} = 5.5 V	V_{IL} = 0.8 V						0.25	mA
			V_{IL} = 0.7 V			0.25				
V_{OL}	V_{CC} = MIN,	V_{IH} = 2 V,	I_{OL} = 20 mA			0.5			0.5	V
I_I	V_{CC} = MAX,	V_I = 5.5 V				1			1	mA
I_{IH}	V_{CC} = MAX,	V_I = 2.7 V				50			50	μA
I_{IL}	V_{CC} = MAX,	V_I = 0.5 V				−2			−2	mA
I_{CCH}	V_{CC} = MAX,	V_I = 0 V			9	19.8		9	19.8	mA
I_{CCL}	V_{CC} = MAX,	V_I = 4.5 V			30	54		30	54	mA

† For conditions shown as MIN or MAX, use the appropriate value specified under recommended operating conditions.
‡ All typical values are at V_{CC} = 5 V, T_A = 25°C.

switching characteristics, V_{CC} = 5 V, T_A = 25°C (see Figure 1)

PARAMETER	FROM (INPUT)	TO (OUTPUT)	TEST CONDITIONS		MIN	TYP	MAX	UNIT
t_{PLH}	A	Y	R_L = 280 Ω	C_L = 15 pF	2	5	7.5	ns
t_{PHL}					2	4.5	7	
t_{PLH}				C_L = 50 pF		7.5		ns
t_{PHL}						7		

PARAMETER MEASUREMENT INFORMATION
SERIES 54/74 AND 54S/74S DEVICES

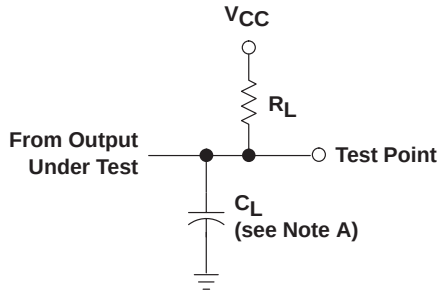

LOAD CIRCUIT

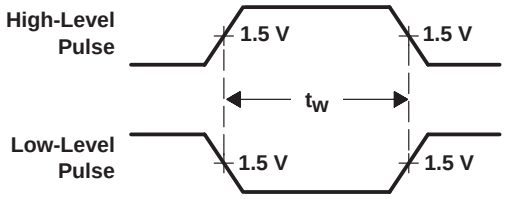

VOLTAGE WAVEFORMS
PULSE WIDTHS

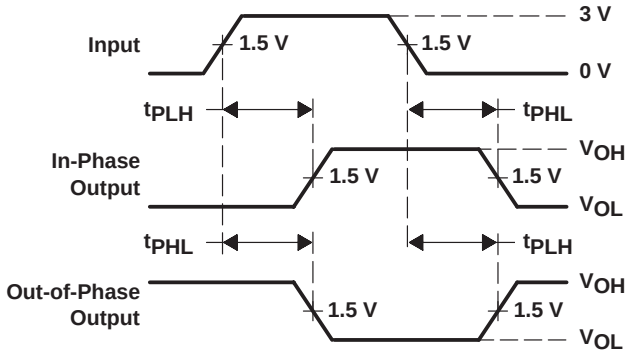

VOLTAGE WAVEFORMS
PROPAGATION DELAY TIMES

NOTES: A. C_L includes probe and jig capacitance.
B. In the examples above, the phase relationships between inputs and outputs have been chosen arbitrarily.
C. All input pulses are supplied by generators having the following characteristics: PRR ≤ 1 MHz, Z_O = 50 Ω, and:
For Series 54/74, t_r ≤ 7 ns, t_f ≤ 7 ns.
For Series 54S/74S, t_r ≤ 2.5 ns, t_f ≤ 2.5 ns.
D. The outputs are measured one at a time with one input transition per measurement.

Figure 1. Load Circuit and Voltage Waveforms

The SN5405 is obsolete and no longer is supplied.

PARAMETER MEASUREMENT INFORMATION
SERIES 54LS/74LS DEVICES

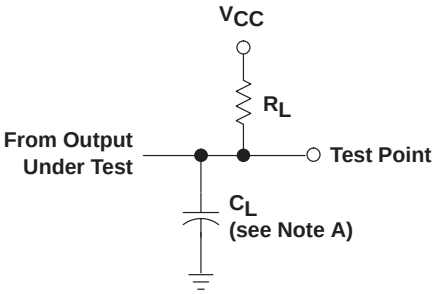

LOAD CIRCUIT

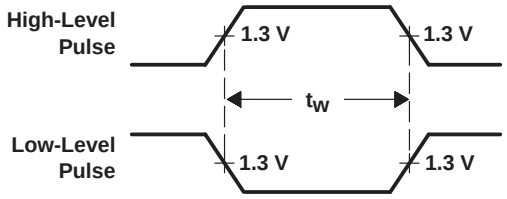

VOLTAGE WAVEFORMS
PULSE WIDTHS

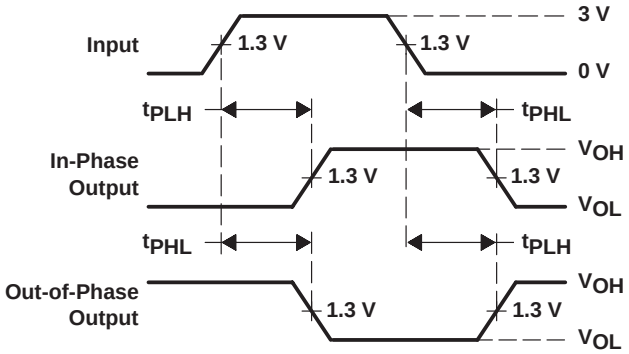

VOLTAGE WAVEFORMS
PROPAGATION DELAY TIMES

NOTES: A. C_L includes probe and jig capacitance.
B. In the examples above, the phase relationships between inputs and outputs have been chosen arbitrarily.
C. All input pulses are supplied by generators having the following characteristics: PRR ≤ 1 MHz, Z_O = 50 Ω, t_r ≤ 1.5 ns, t_f ≤ 2.6 ns.
D. The outputs are measured one at a time with one input transition per measurement.

Figure 2. Load Circuit and Voltage Waveforms

PACKAGING INFORMATION

Orderable part number	Status (1)	Material type (2)	Package | Pins	Package qty | Carrier	RoHS (3)	Lead finish/ Ball material (4)	MSL rating/ Peak reflow (5)	Op temp (°C)	Part marking (6)
JM38510/07004BCA	Active	Production	CDIP (J) | 14	25 | TUBE	No	SNPB	N/A for Pkg Type	-55 to 125	JM38510/ 07004BCA
JM38510/07004BCA.A	Active	Production	CDIP (J) | 14	25 | TUBE	No	SNPB	N/A for Pkg Type	-55 to 125	JM38510/ 07004BCA
M38510/07004BCA	Active	Production	CDIP (J) | 14	25 | TUBE	No	SNPB	N/A for Pkg Type	-55 to 125	JM38510/ 07004BCA
SN54LS05J	Active	Production	CDIP (J) | 14	25 | TUBE	No	SNPB	N/A for Pkg Type	-55 to 125	SN54LS05J
SN54LS05J.A	Active	Production	CDIP (J) | 14	25 | TUBE	No	SNPB	N/A for Pkg Type	-55 to 125	SN54LS05J
SN54S05J	Active	Production	CDIP (J) | 14	25 | TUBE	No	SNPB	N/A for Pkg Type	-55 to 125	SN54S05J
SN54S05J.A	Active	Production	CDIP (J) | 14	25 | TUBE	No	SNPB	N/A for Pkg Type	-55 to 125	SN54S05J
SN7405N	Active	Production	PDIP (N) | 14	25 | TUBE	Yes	NIPDAU	N/A for Pkg Type	0 to 70	SN7405N
SN7405N.A	Active	Production	PDIP (N) | 14	25 | TUBE	Yes	NIPDAU	N/A for Pkg Type	0 to 70	SN7405N
SN7405NE4	Active	Production	PDIP (N) | 14	25 | TUBE	Yes	NIPDAU	N/A for Pkg Type	0 to 70	SN7405N
SN74LS05D	Active	Production	SOIC (D) | 14	50 | TUBE	Yes	NIPDAU	Level-1-260C-UNLIM	0 to 70	LS05
SN74LS05D.A	Active	Production	SOIC (D) | 14	50 | TUBE	Yes	NIPDAU	Level-1-260C-UNLIM	0 to 70	LS05
SN74LS05DBR	Active	Production	SSOP (DB) | 14	2000 | LARGE T&R	Yes	NIPDAU	Level-1-260C-UNLIM	0 to 70	LS05
SN74LS05DBR.A	Active	Production	SSOP (DB) | 14	2000 | LARGE T&R	Yes	NIPDAU	Level-1-260C-UNLIM	0 to 70	LS05
SN74LS05DR	Active	Production	SOIC (D) | 14	2500 | LARGE T&R	Yes	NIPDAU	Level-1-260C-UNLIM	0 to 70	LS05
SN74LS05DR.A	Active	Production	SOIC (D) | 14	2500 | LARGE T&R	Yes	NIPDAU	Level-1-260C-UNLIM	0 to 70	LS05
SN74LS05N	Active	Production	PDIP (N) | 14	25 | TUBE	Yes	NIPDAU	N/A for Pkg Type	0 to 70	SN74LS05N
SN74LS05N.A	Active	Production	PDIP (N) | 14	25 | TUBE	Yes	NIPDAU	N/A for Pkg Type	0 to 70	SN74LS05N
SN74LS05NE4	Active	Production	PDIP (N) | 14	25 | TUBE	Yes	NIPDAU	N/A for Pkg Type	0 to 70	SN74LS05N
SN74LS05NSR	Active	Production	SOP (NS) | 14	2000 | LARGE T&R	Yes	NIPDAU	Level-1-260C-UNLIM	0 to 70	74LS05
SN74LS05NSR.A	Active	Production	SOP (NS) | 14	2000 | LARGE T&R	Yes	NIPDAU	Level-1-260C-UNLIM	0 to 70	74LS05
SN74LS05NSR.B	Active	Production	SOP (NS) | 14	2000 | LARGE T&R	Yes	NIPDAU	Level-1-260C-UNLIM	0 to 70	74LS05
SN74S05D	Active	Production	SOIC (D) | 14	50 | TUBE	Yes	NIPDAU	Level-1-260C-UNLIM	0 to 70	S05
SN74S05D.A	Active	Production	SOIC (D) | 14	50 | TUBE	Yes	NIPDAU	Level-1-260C-UNLIM	0 to 70	S05
SN74S05N	Active	Production	PDIP (N) | 14	25 | TUBE	Yes	NIPDAU	N/A for Pkg Type	0 to 70	SN74S05N
SN74S05N.A	Active	Production	PDIP (N) | 14	25 | TUBE	Yes	NIPDAU	N/A for Pkg Type	0 to 70	SN74S05N
SN74S05NSR	Active	Production	SOP (NS) | 14	2000 | LARGE T&R	Yes	NIPDAU	Level-1-260C-UNLIM	0 to 70	74S05

Orderable part number	Status (1)	Material type (2)	Package | Pins	Package qty | Carrier	RoHS (3)	Lead finish/ Ball material (4)	MSL rating/ Peak reflow (5)	Op temp (°C)	Part marking (6)
SN74S05NSR.A	Active	Production	SOP (NS) | 14	2000 | LARGE T&R	Yes	NIPDAU	Level-1-260C-UNLIM	0 to 70	74S05
SNJ54LS05FK	Active	Production	LCCC (FK) | 20	55 | TUBE	No	SNPB	N/A for Pkg Type	-55 to 125	SNJ54LS 05FK
SNJ54LS05FK.A	Active	Production	LCCC (FK) | 20	55 | TUBE	No	SNPB	N/A for Pkg Type	-55 to 125	SNJ54LS 05FK
SNJ54LS05J	Active	Production	CDIP (J) | 14	25 | TUBE	No	SNPB	N/A for Pkg Type	-55 to 125	SNJ54LS05J
SNJ54LS05J.A	Active	Production	CDIP (J) | 14	25 | TUBE	No	SNPB	N/A for Pkg Type	-55 to 125	SNJ54LS05J
SNJ54LS05W	Active	Production	CFP (W) | 14	25 | TUBE	No	SNPB	N/A for Pkg Type	-55 to 125	SNJ54LS05W
SNJ54LS05W.A	Active	Production	CFP (W) | 14	25 | TUBE	No	SNPB	N/A for Pkg Type	-55 to 125	SNJ54LS05W
SNJ54S05FK	Active	Production	LCCC (FK) | 20	55 | TUBE	No	SNPB	N/A for Pkg Type	-55 to 125	SNJ54S 05FK
SNJ54S05FK.A	Active	Production	LCCC (FK) | 20	55 | TUBE	No	SNPB	N/A for Pkg Type	-55 to 125	SNJ54S 05FK
SNJ54S05J	Active	Production	CDIP (J) | 14	25 | TUBE	No	SNPB	N/A for Pkg Type	-55 to 125	SNJ54S05J
SNJ54S05J.A	Active	Production	CDIP (J) | 14	25 | TUBE	No	SNPB	N/A for Pkg Type	-55 to 125	SNJ54S05J
SNJ54S05W	Active	Production	CFP (W) | 14	25 | TUBE	No	SNPB	N/A for Pkg Type	-55 to 125	SNJ54S05W
SNJ54S05W.A	Active	Production	CFP (W) | 14	25 | TUBE	No	SNPB	N/A for Pkg Type	-55 to 125	SNJ54S05W

(1) **Status:** For more details on status, see our product life cycle.

(2) **Material type:** When designated, preproduction parts are prototypes/experimental devices, and are not yet approved or released for full production. Testing and final process, including without limitation quality assurance, reliability performance testing, and/or process qualification, may not yet be complete, and this item is subject to further changes or possible discontinuation. If available for ordering, purchases will be subject to an additional waiver at checkout, and are intended for early internal evaluation purposes only. These items are sold without warranties of any kind.

(3) **RoHS values:** Yes, No, RoHS Exempt. See the TI RoHS Statement for additional information and value definition.

(4) **Lead finish/Ball material:** Parts may have multiple material finish options. Finish options are separated by a vertical ruled line. Lead finish/Ball material values may wrap to two lines if the finish value exceeds the maximum column width.

(5) **MSL rating/Peak reflow:** The moisture sensitivity level ratings and peak solder (reflow) temperatures. In the event that a part has multiple moisture sensitivity ratings, only the lowest level per JEDEC standards is shown. Refer to the shipping label for the actual reflow temperature that will be used to mount the part to the printed circuit board.

(6) **Part marking:** There may be an additional marking, which relates to the logo, the lot trace code information, or the environmental category of the part.

Multiple part markings will be inside parentheses. Only one part marking contained in parentheses and separated by a "~" will appear on a part. If a line is indented then it is a continuation of the previous line and the two combined represent the entire part marking for that device.

Important Information and Disclaimer: The information provided on this page represents TI's knowledge and belief as of the date that it is provided. TI bases its knowledge and belief on information provided by third parties, and makes no representation or warranty as to the accuracy of such information. Efforts are underway to better integrate information from third parties. TI has taken and continues to take reasonable steps to provide representative and accurate information but may not have conducted destructive testing or chemical analysis on incoming materials and chemicals. TI and TI suppliers consider certain information to be proprietary, and thus CAS numbers and other limited information may not be available for release.

In no event shall TI's liability arising out of such information exceed the total purchase price of the TI part(s) at issue in this document sold by TI to Customer on an annual basis.

OTHER QUALIFIED VERSIONS OF SN54LS05, SN54S05, SN74LS05, SN74S05 :

- Catalog : SN74LS05, SN74S05
- Military : SN54LS05, SN54S05

NOTE: Qualified Version Definitions:

- Catalog - TI's standard catalog product
- Military - QML certified for Military and Defense Applications

TAPE AND REEL INFORMATION

REEL DIMENSIONS

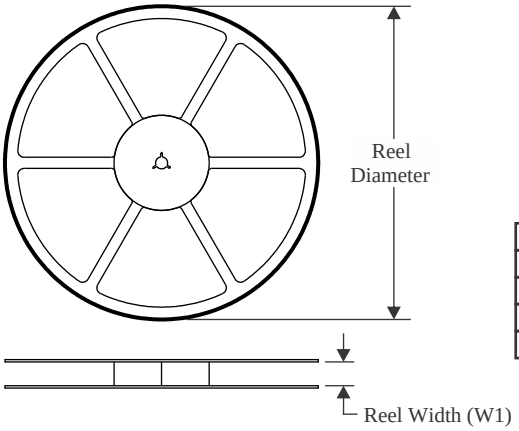

TAPE DIMENSIONS

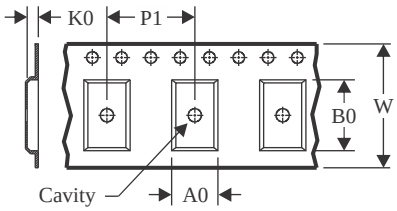

A0	Dimension designed to accommodate the component width
B0	Dimension designed to accommodate the component length
K0	Dimension designed to accommodate the component thickness
W	Overall width of the carrier tape
P1	Pitch between successive cavity centers

QUADRANT ASSIGNMENTS FOR PIN 1 ORIENTATION IN TAPE

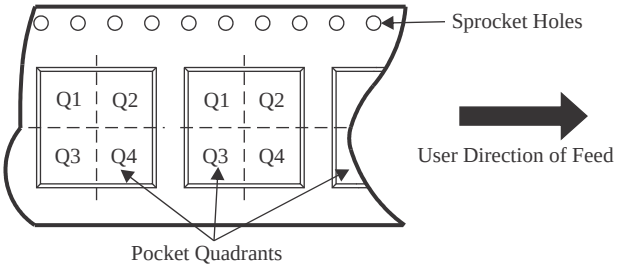

*All dimensions are nominal

Device	Package Type	Package Drawing	Pins	SPQ	Reel Diameter (mm)	Reel Width W1 (mm)	A0 (mm)	B0 (mm)	K0 (mm)	P1 (mm)	W (mm)	Pin1 Quadrant
SN74LS05DBR	SSOP	DB	14	2000	330.0	16.4	8.35	6.6	2.4	12.0	16.0	Q1
SN74LS05DR	SOIC	D	14	2500	330.0	16.4	6.5	9.0	2.1	8.0	16.0	Q1
SN74LS05NSR	SOP	NS	14	2000	330.0	16.4	8.1	10.4	2.5	12.0	16.0	Q1
SN74S05NSR	SOP	NS	14	2000	330.0	16.4	8.1	10.4	2.5	12.0	16.0	Q1

TAPE AND REEL BOX DIMENSIONS

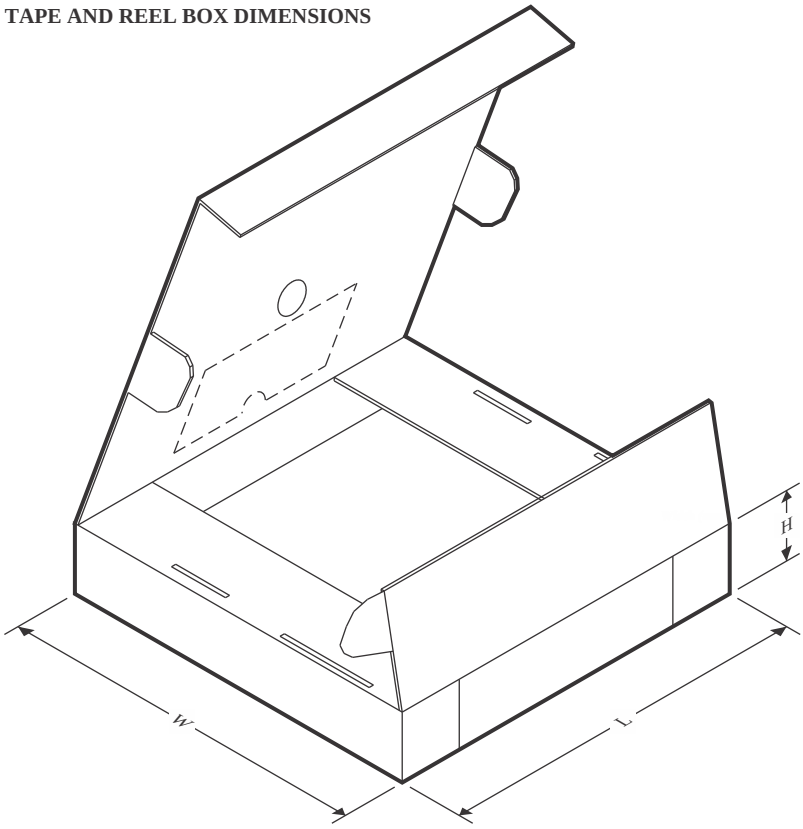

*All dimensions are nominal

Device	Package Type	Package Drawing	Pins	SPQ	Length (mm)	Width (mm)	Height (mm)
SN74LS05DBR	SSOP	DB	14	2000	353.0	353.0	32.0
SN74LS05DR	SOIC	D	14	2500	353.0	353.0	32.0
SN74LS05NSR	SOP	NS	14	2000	353.0	353.0	32.0
SN74S05NSR	SOP	NS	14	2000	353.0	353.0	32.0

TUBE

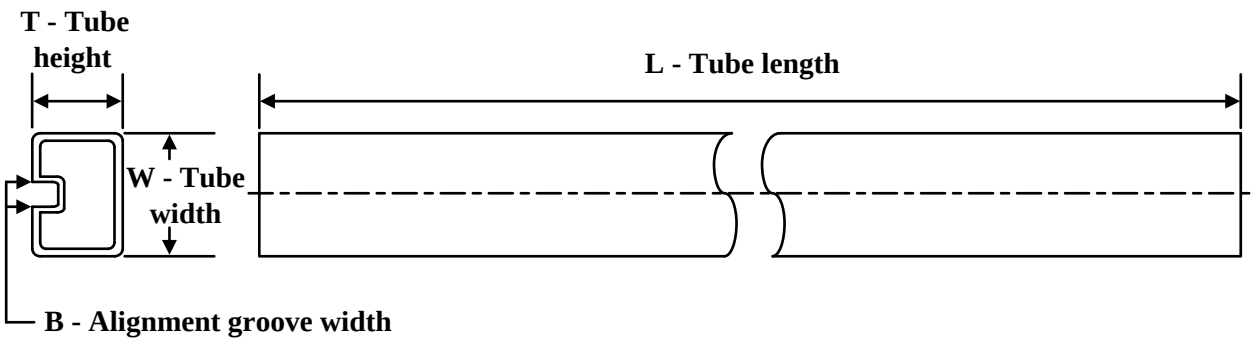

*All dimensions are nominal

Device	Package Name	Package Type	Pins	SPQ	L (mm)	W (mm)	T (µm)	B (mm)
SN7405N	N	PDIP	14	25	506	13.97	11230	4.32
SN7405N	N	PDIP	14	25	506	13.97	11230	4.32
SN7405N.A	N	PDIP	14	25	506	13.97	11230	4.32
SN7405N.A	N	PDIP	14	25	506	13.97	11230	4.32
SN7405NE4	N	PDIP	14	25	506	13.97	11230	4.32
SN7405NE4	N	PDIP	14	25	506	13.97	11230	4.32
SN74LS05D	D	SOIC	14	50	506.6	8	3940	4.32
SN74LS05D.A	D	SOIC	14	50	506.6	8	3940	4.32
SN74LS05N	N	PDIP	14	25	506	13.97	11230	4.32
SN74LS05N	N	PDIP	14	25	506	13.97	11230	4.32
SN74LS05N.A	N	PDIP	14	25	506	13.97	11230	4.32
SN74LS05N.A	N	PDIP	14	25	506	13.97	11230	4.32
SN74LS05NE4	N	PDIP	14	25	506	13.97	11230	4.32
SN74LS05NE4	N	PDIP	14	25	506	13.97	11230	4.32
SN74S05D	D	SOIC	14	50	506.6	8	3940	4.32
SN74S05D.A	D	SOIC	14	50	506.6	8	3940	4.32
SN74S05N	N	PDIP	14	25	506	13.97	11230	4.32
SN74S05N	N	PDIP	14	25	506	13.97	11230	4.32
SN74S05N.A	N	PDIP	14	25	506	13.97	11230	4.32
SN74S05N.A	N	PDIP	14	25	506	13.97	11230	4.32
SNJ54LS05FK	FK	LCCC	20	55	506.98	12.06	2030	NA
SNJ54LS05FK.A	FK	LCCC	20	55	506.98	12.06	2030	NA
SNJ54LS05W	W	CFP	14	25	506.98	26.16	6220	NA
SNJ54LS05W.A	W	CFP	14	25	506.98	26.16	6220	NA
SNJ54S05FK	FK	LCCC	20	55	506.98	12.06	2030	NA
SNJ54S05FK.A	FK	LCCC	20	55	506.98	12.06	2030	NA

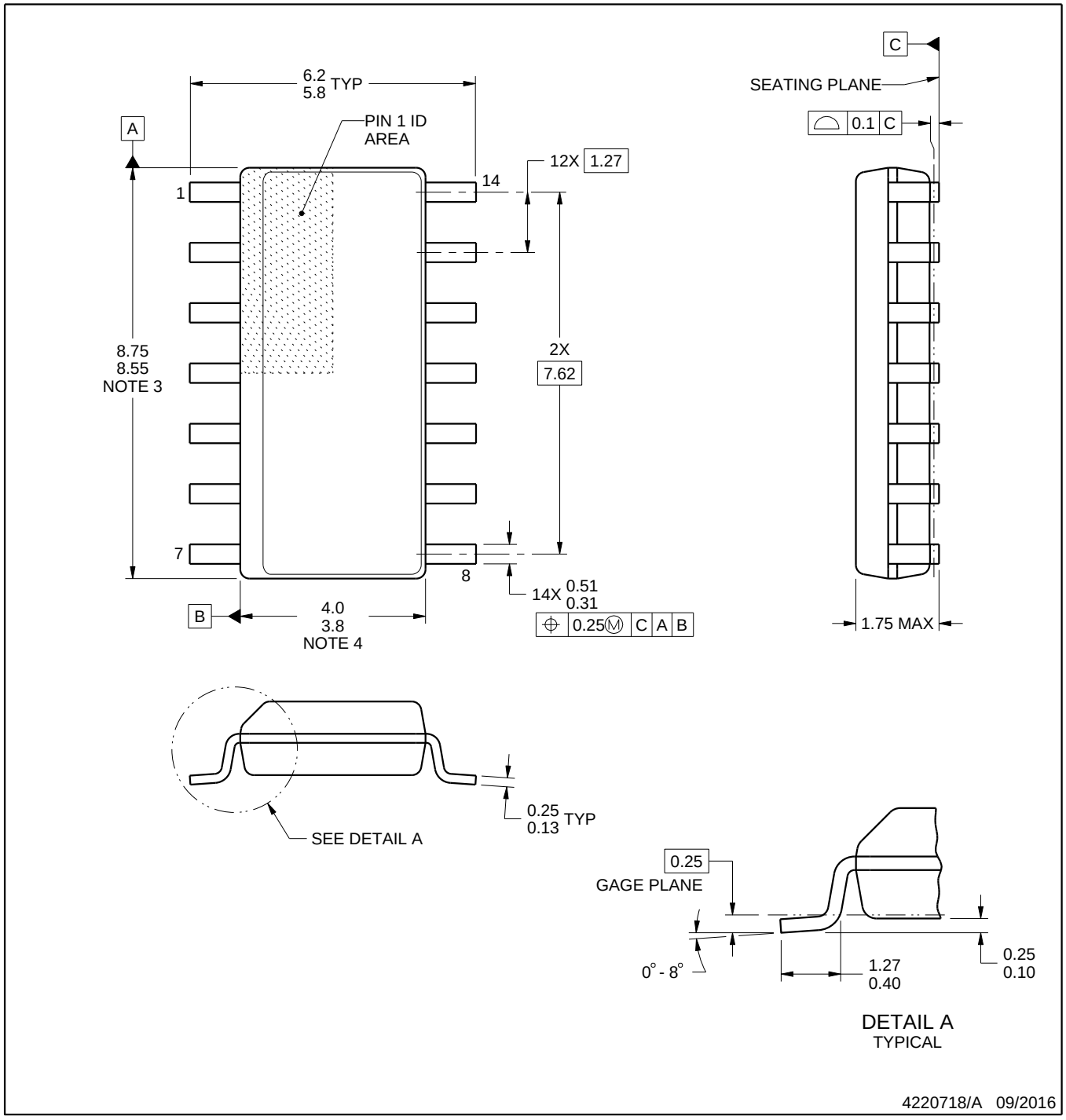

NOTES:

1. All linear dimensions are in millimeters. Dimensions in parenthesis are for reference only. Dimensioning and tolerancing per ASME Y14.5M.
2. This drawing is subject to change without notice.
3. This dimension does not include mold flash, protrusions, or gate burrs. Mold flash, protrusions, or gate burrs shall not exceed 0.15 mm, per side.
4. This dimension does not include interlead flash. Interlead flash shall not exceed 0.43 mm, per side.
5. Reference JEDEC registration MS-012, variation AB.

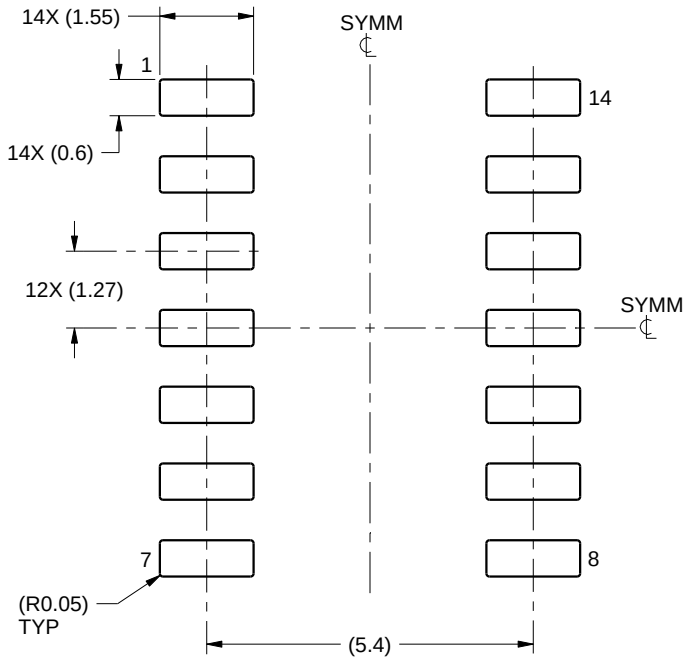

LAND PATTERN EXAMPLE
SCALE:8X

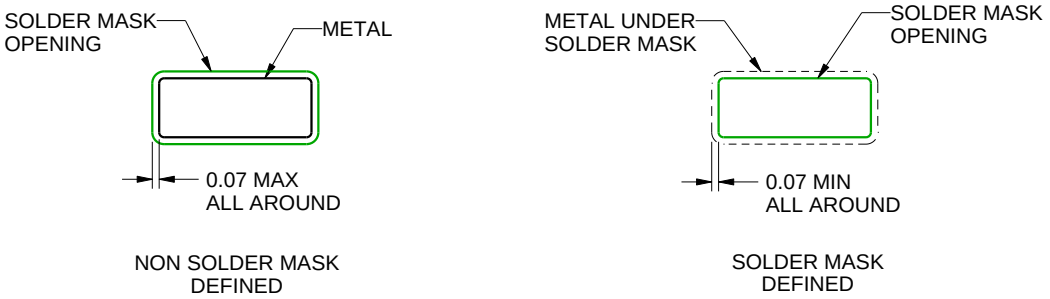

SOLDER MASK DETAILS

4220718/A 09/2016

NOTES: (continued)

6. Publication IPC-7351 may have alternate designs.
7. Solder mask tolerances between and around signal pads can vary based on board fabrication site.

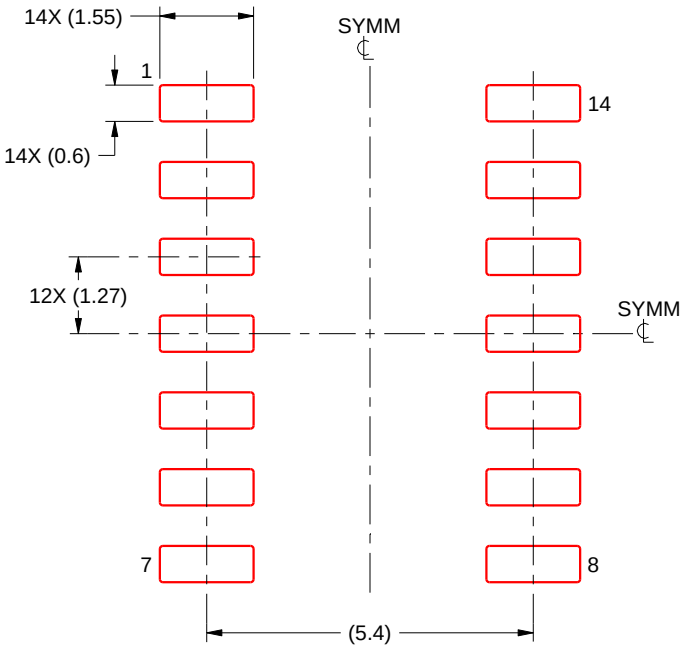

SOLDER PASTE EXAMPLE
BASED ON 0.125 mm THICK STENCIL
SCALE:8X

4220718/A 09/2016

NOTES: (continued)

8. Laser cutting apertures with trapezoidal walls and rounded corners may offer better paste release. IPC-7525 may have alternate design recommendations.
9. Board assembly site may have different recommendations for stencil design.

MECHANICAL DATA

NS (R-PDSO-G)** **PLASTIC SMALL-OUTLINE PACKAGE**

14-PINS SHOWN

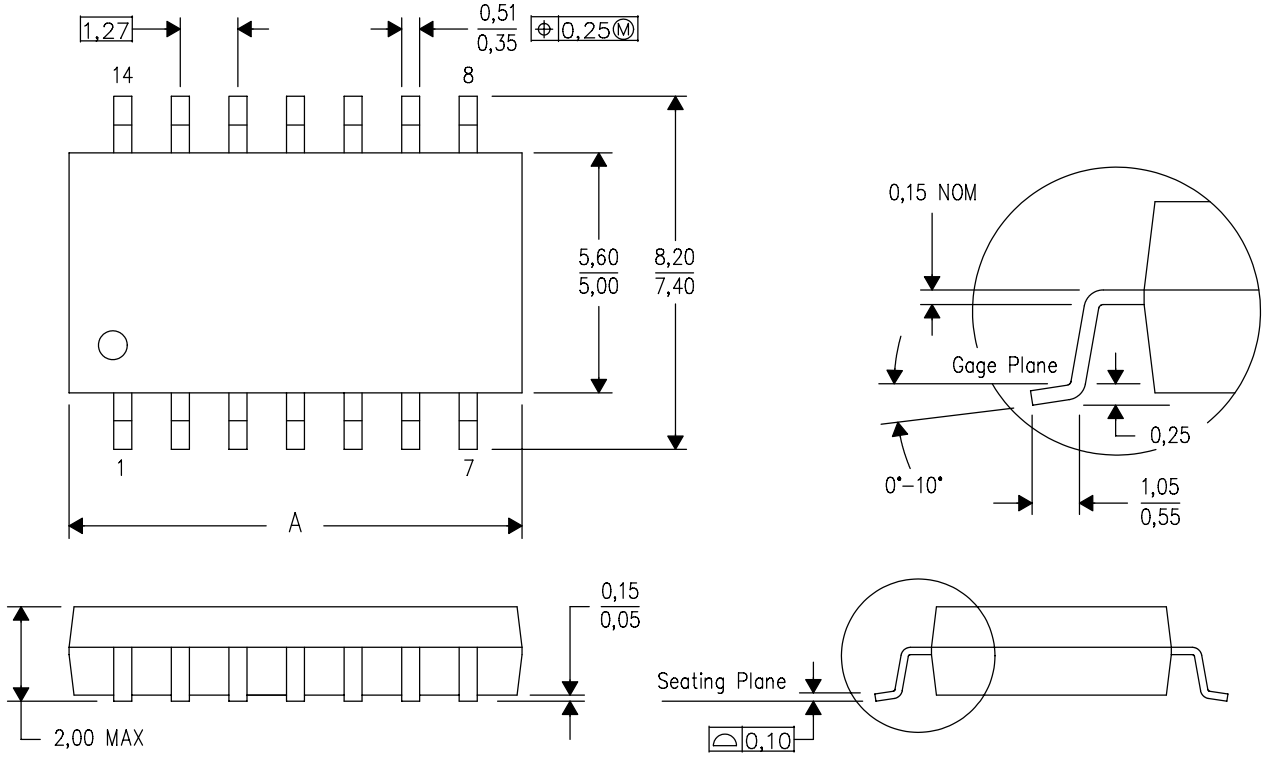

DIM \ PINS **	14	16	20	24
A MAX	10,50	10,50	12,90	15,30
A MIN	9,90	9,90	12,30	14,70

4040062/C 03/03

NOTES:
A. All linear dimensions are in millimeters.
B. This drawing is subject to change without notice.
C. Body dimensions do not include mold flash or protrusion, not to exceed 0,15.

W (R–GDFP–F14) CERAMIC DUAL FLATPACK

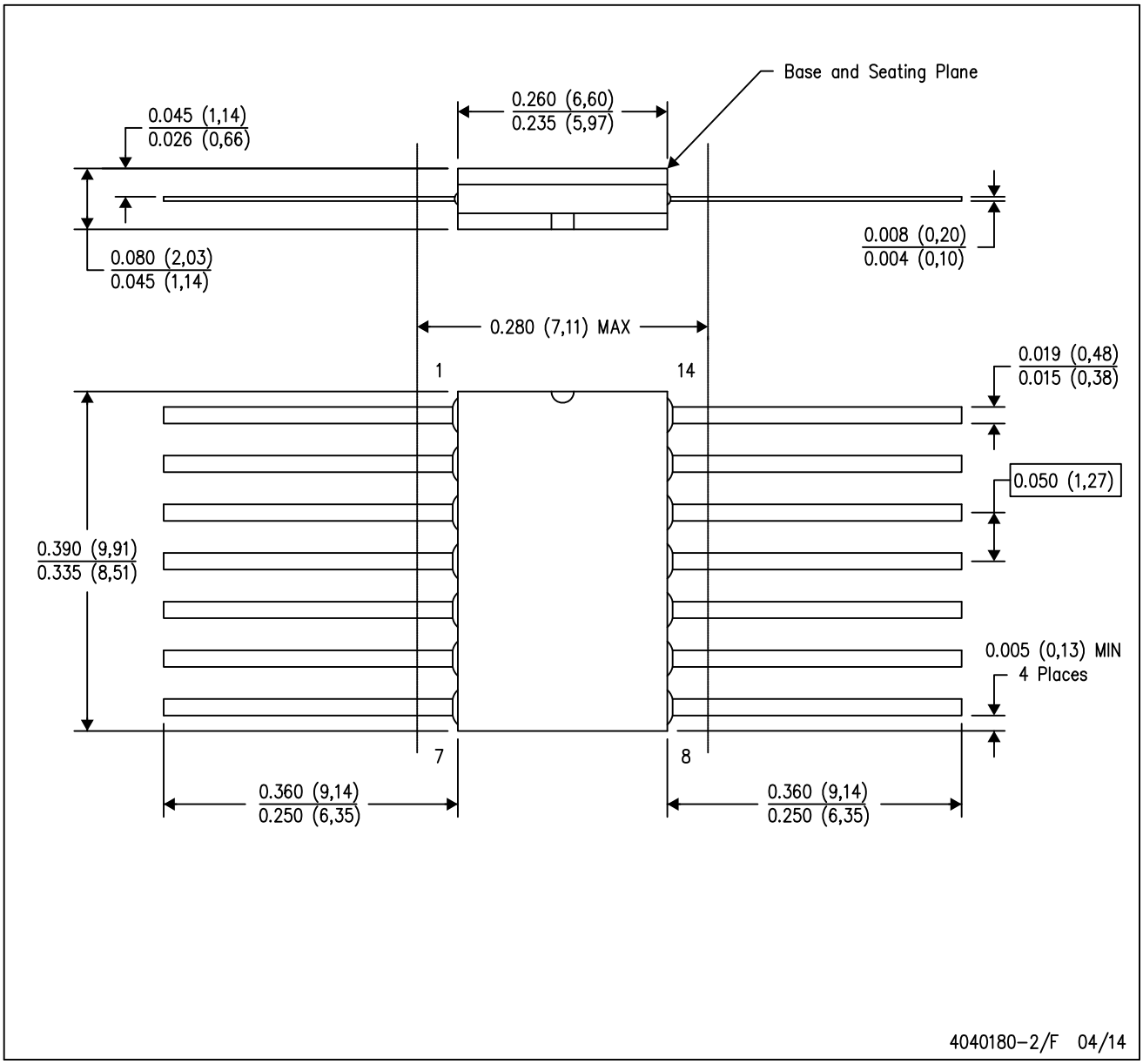

NOTES:
A. All linear dimensions are in inches (millimeters).
B. This drawing is subject to change without notice.
C. This package can be hermetically sealed with a ceramic lid using glass frit.
D. Index point is provided on cap for terminal identification only.
E. Falls within MIL STD 1835 GDFP1–F14

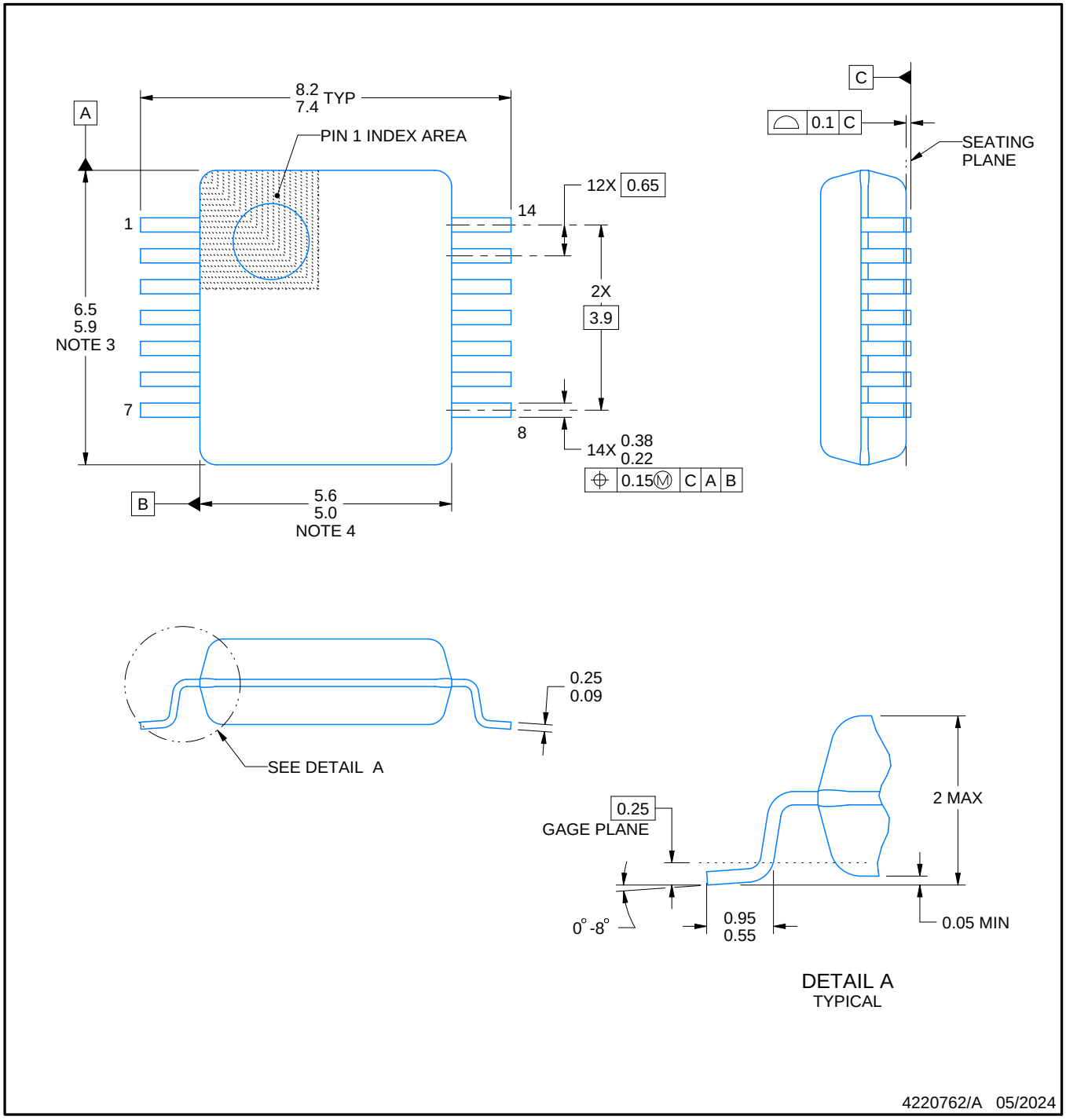

NOTES:

1. All linear dimensions are in millimeters. Any dimensions in parenthesis are for reference only. Dimensioning and tolerancing per ASME Y14.5M.
2. This drawing is subject to change without notice.
3. This dimension does not include mold flash, protrusions, or gate burrs. Mold flash, protrusions, or gate burrs shall not exceed 0.15 mm per side.
4. Reference JEDEC registration MO-150.

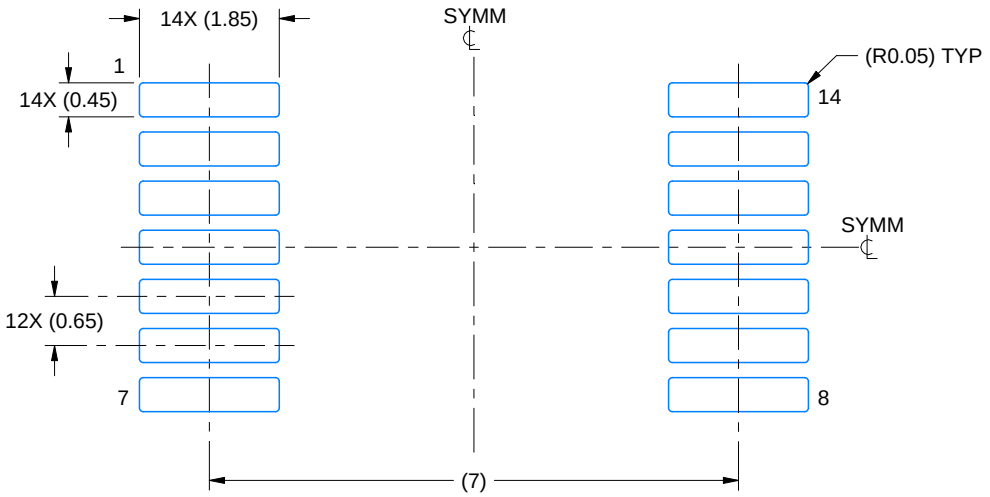

LAND PATTERN EXAMPLE
EXPOSED METAL SHOWN
SCALE: 10X

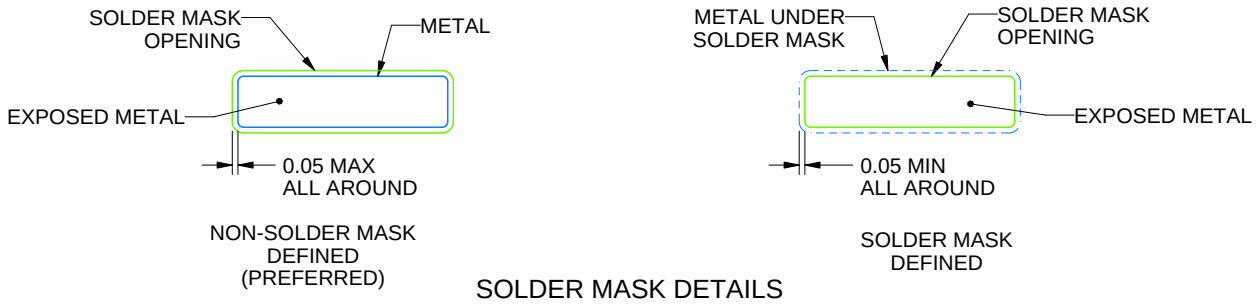

SOLDER MASK DETAILS

4220762/A 05/2024

NOTES: (continued)

5. Publication IPC-7351 may have alternate designs.
6. Solder mask tolerances between and around signal pads can vary based on board fabrication site.

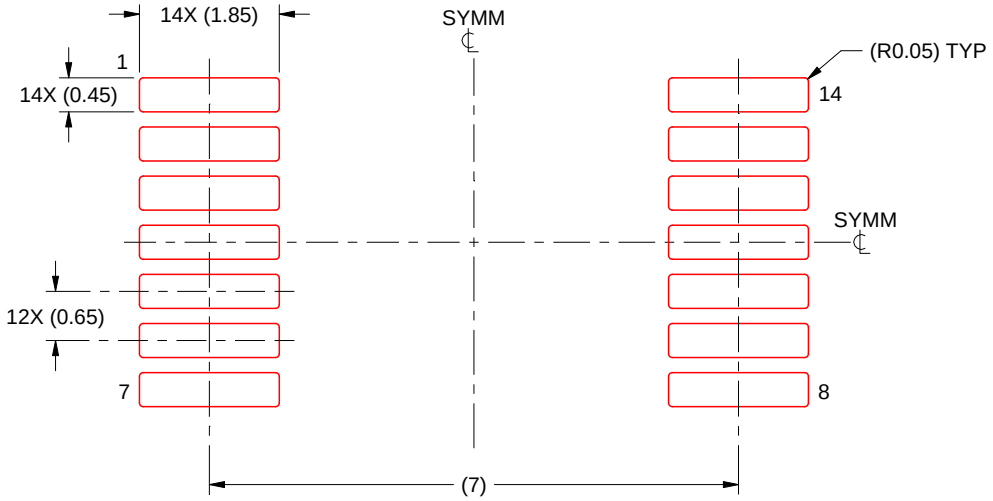

SOLDER PASTE EXAMPLE
BASED ON 0.125 mm THICK STENCIL
SCALE: 10X

4220762/A 05/2024

NOTES: (continued)

7. Laser cutting apertures with trapezoidal walls and rounded corners may offer better paste release. IPC-7525 may have alternate design recommendations.
8. Board assembly site may have different recommendations for stencil design.

GENERIC PACKAGE VIEW

FK 20

LCCC - 2.03 mm max height

8.89 x 8.89, 1.27 mm pitch

LEADLESS CERAMIC CHIP CARRIER

This image is a representation of the package family, actual package may vary.
Refer to the product data sheet for package details.

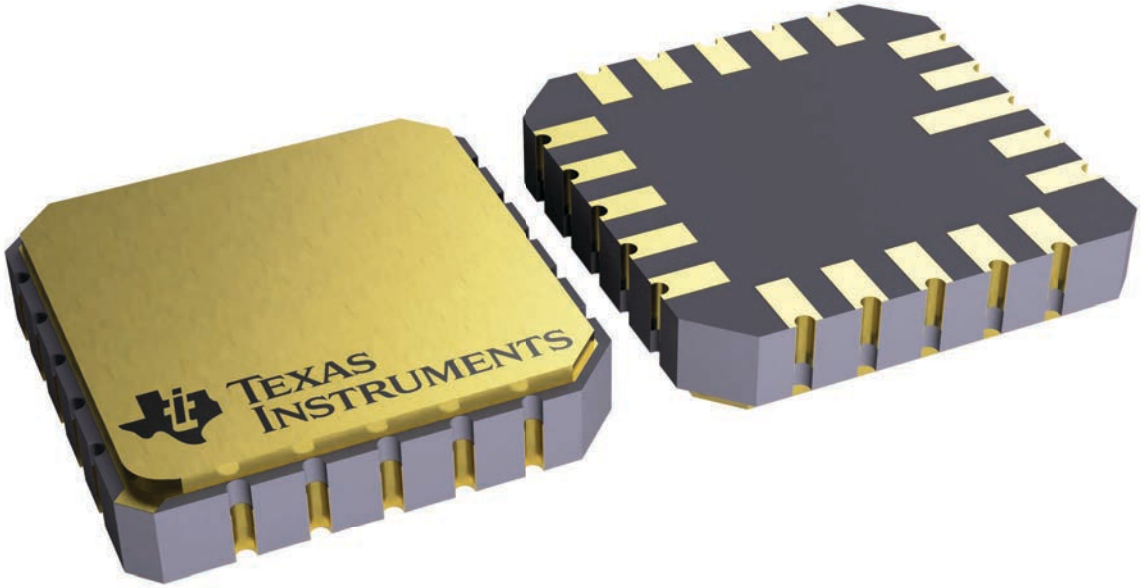

4229370VA\

J 14 CDIP - 5.08 mm max height

CERAMIC DUAL IN LINE PACKAGE

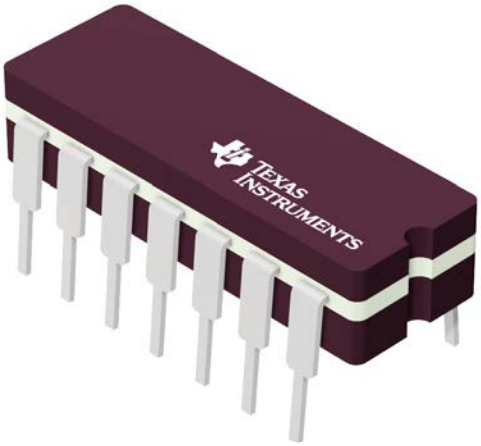

Images above are just a representation of the package family, actual package may vary.
Refer to the product data sheet for package details.

4040083-5/G

PACKAGE OUTLINE

J0014A

CDIP - 5.08 mm max height

CERAMIC DUAL IN LINE PACKAGE

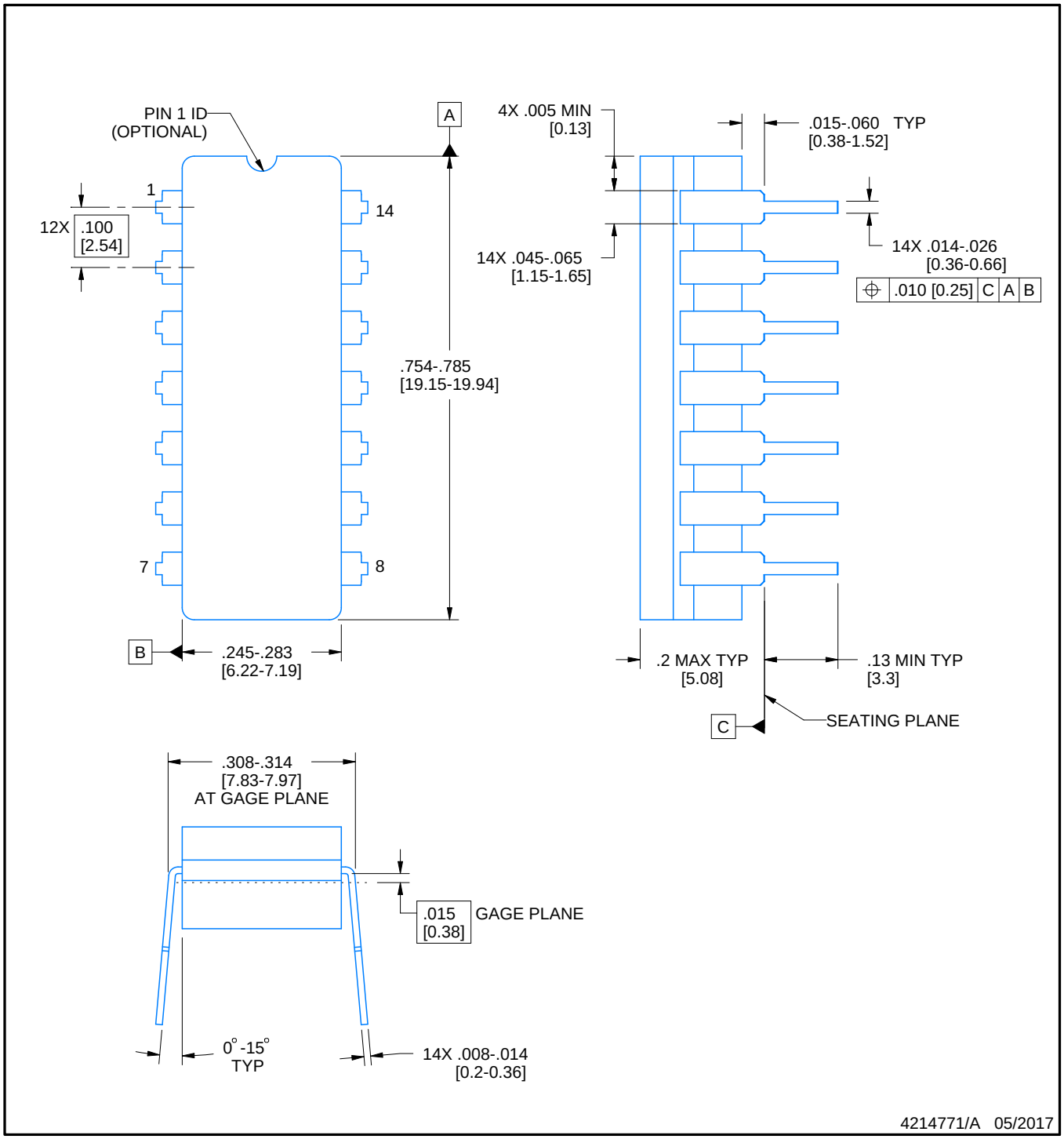

NOTES:

1. All controlling linear dimensions are in inches. Dimensions in brackets are in millimeters. Any dimension in brackets or parenthesis are for reference only. Dimensioning and tolerancing per ASME Y14.5M.
2. This drawing is subject to change without notice.
3. This package is hermitically sealed with a ceramic lid using glass frit.
4. Index point is provided on cap for terminal identification only and on press ceramic glass frit seal only.
5. Falls within MIL-STD-1835 and GDIP1-T14.

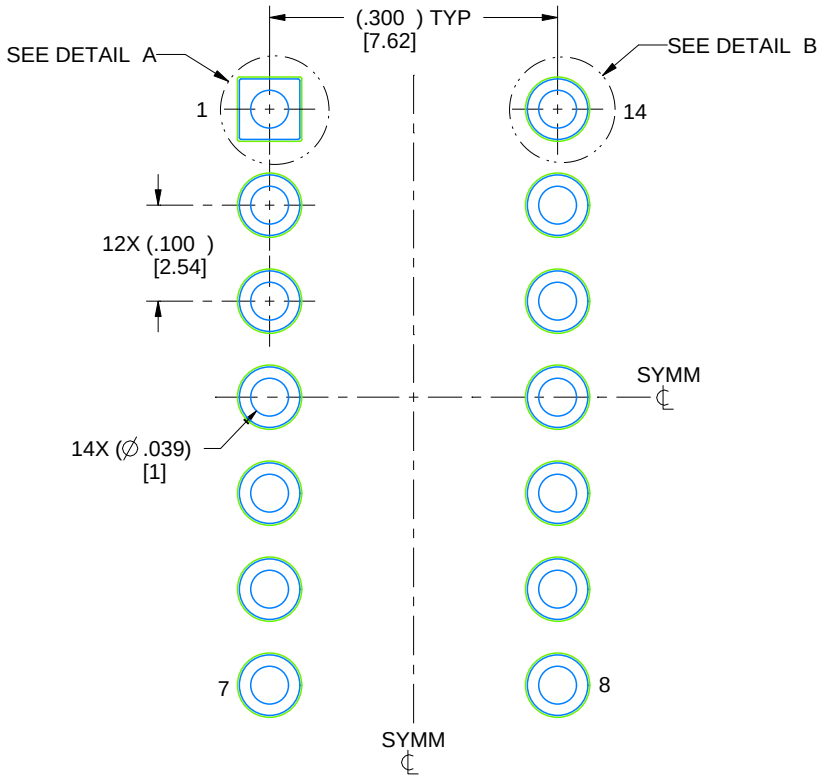

LAND PATTERN EXAMPLE
NON-SOLDER MASK DEFINED
SCALE: 5X

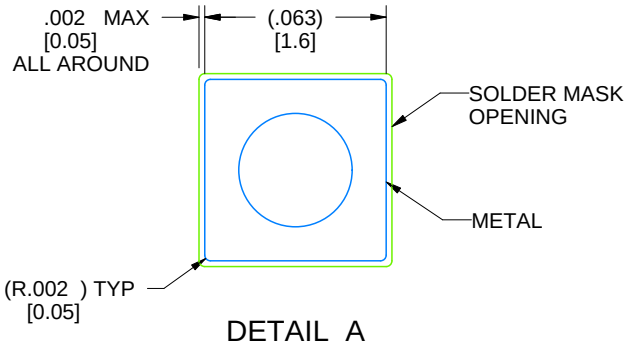

DETAIL A
SCALE: 15X

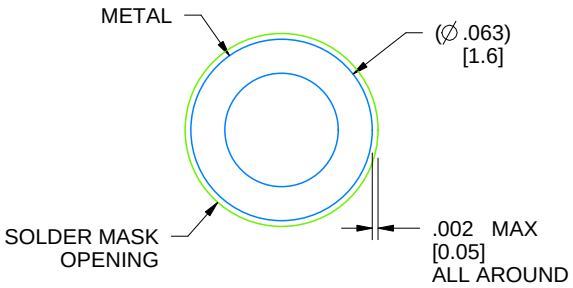

DETAIL B
13X, SCALE: 15X

4214771/A 05/2017

N (R–PDIP–T**) PLASTIC DUAL–IN–LINE PACKAGE

16 PINS SHOWN

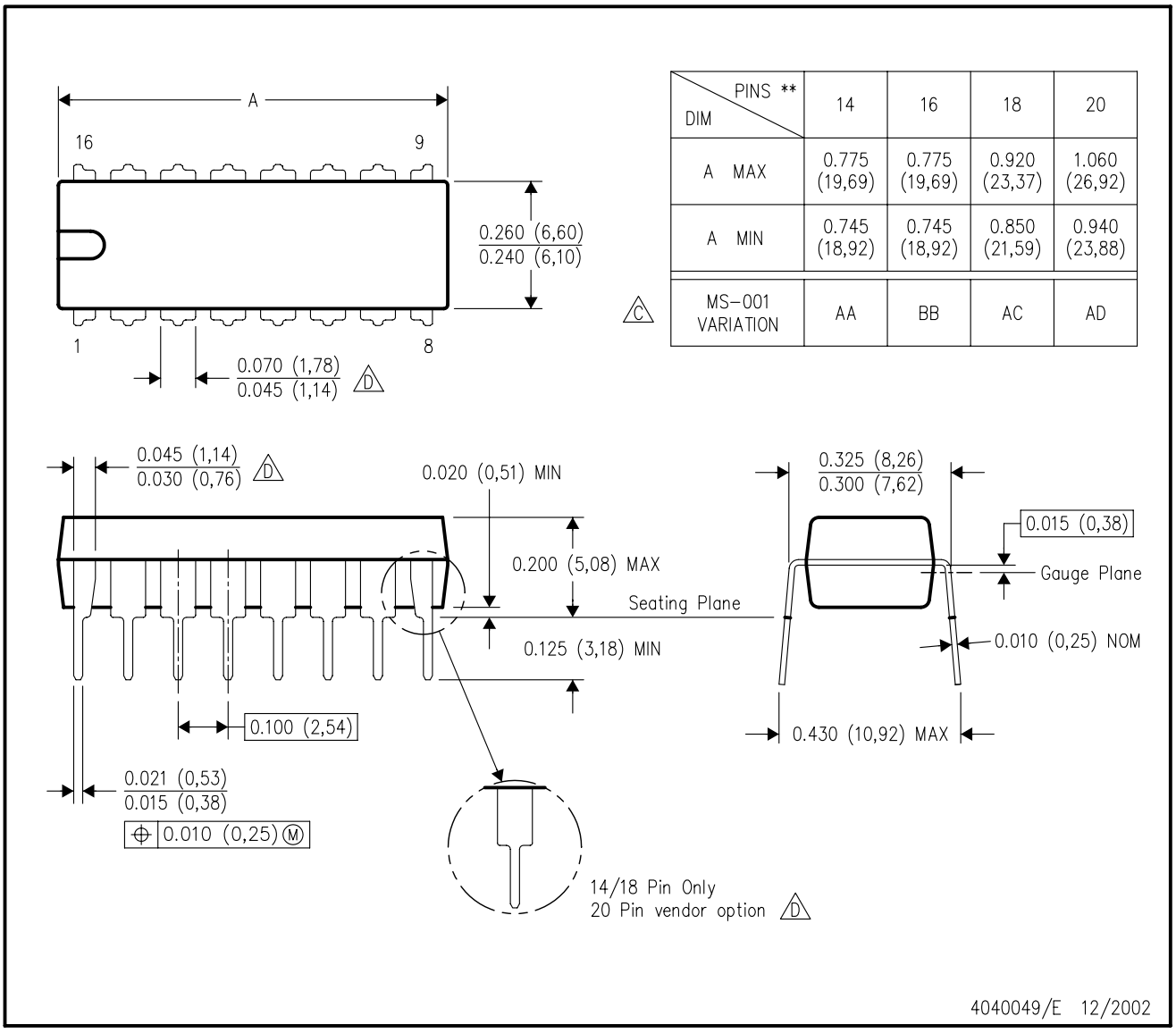

DIM \ PINS **	14	16	18	20
A MAX	0.775 (19,69)	0.775 (19,69)	0.920 (23,37)	1.060 (26,92)
A MIN	0.745 (18,92)	0.745 (18,92)	0.850 (21,59)	0.940 (23,88)
MS–001 VARIATION (C)	AA	BB	AC	AD

NOTES:
A. All linear dimensions are in inches (millimeters).
B. This drawing is subject to change without notice.
C. Falls within JEDEC MS–001, except 18 and 20 pin minimum body length (Dim A).
D. The 20 pin end lead shoulder width is a vendor option, either half or full width.

IMPORTANT NOTICE AND DISCLAIMER

TI PROVIDES TECHNICAL AND RELIABILITY DATA (INCLUDING DATA SHEETS), DESIGN RESOURCES (INCLUDING REFERENCE DESIGNS), APPLICATION OR OTHER DESIGN ADVICE, WEB TOOLS, SAFETY INFORMATION, AND OTHER RESOURCES “AS IS” AND WITH ALL FAULTS, AND DISCLAIMS ALL WARRANTIES, EXPRESS AND IMPLIED, INCLUDING WITHOUT LIMITATION ANY IMPLIED WARRANTIES OF MERCHANTABILITY, FITNESS FOR A PARTICULAR PURPOSE OR NON-INFRINGEMENT OF THIRD PARTY INTELLECTUAL PROPERTY RIGHTS.

These resources are intended for skilled developers designing with TI products. You are solely responsible for (1) selecting the appropriate TI products for your application, (2) designing, validating and testing your application, and (3) ensuring your application meets applicable standards, and any other safety, security, regulatory or other requirements.

These resources are subject to change without notice. TI grants you permission to use these resources only for development of an application that uses the TI products described in the resource. Other reproduction and display of these resources is prohibited. No license is granted to any other TI intellectual property right or to any third party intellectual property right. TI disclaims responsibility for, and you will fully indemnify TI and its representatives against, any claims, damages, costs, losses, and liabilities arising out of your use of these resources.

TI’s products are provided subject to TI’s Terms of Sale or other applicable terms available either on ti.com or provided in conjunction with such TI products. TI’s provision of these resources does not expand or otherwise alter TI’s applicable warranties or warranty disclaimers for TI products.

TI objects to and rejects any additional or different terms you may have proposed.

Mailing Address: Texas Instruments, Post Office Box 655303, Dallas, Texas 75265
Copyright © 2025, Texas Instruments Incorporated